NOTES: UNLESS OTHERWISE SPECIFIED

1. CRITICAL LOAD PATH, LOW TEMP ITEM. MAINTAIN TRACEABILITY PER ID00100.
2. USE "ANTI-SIEZE" ON BOLTS & CROSS-TORQUE PER DS00008.
3. SHRINK FIT ITEMS 28 AND 29 INTO ITEM 1.
4. GREASE AFTER ASSEMBLY.
5. PRESSURE TEST ALL PORTS PER TS00465.
6. INSTALL ITEM 32, USE LOCKING COMPOUND (ITEM 34). MATCH DRILL USING ø.187 x 1.0 DP. PRESS FIT SPIRAL PIN (ITEM 33) INTO ITEM 1 AND 32.
7. INSTALL ITEM 39, TORQUE TO 20-22 ft-lbs, MATCH DRILL USING ø 250. INSTALL COTTER PIN (ITEM 40).

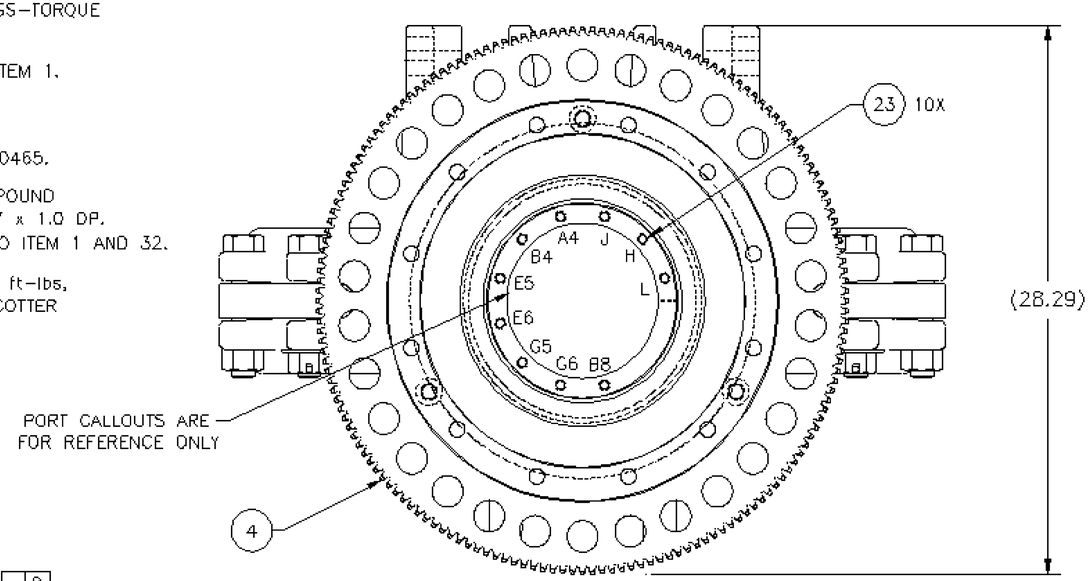

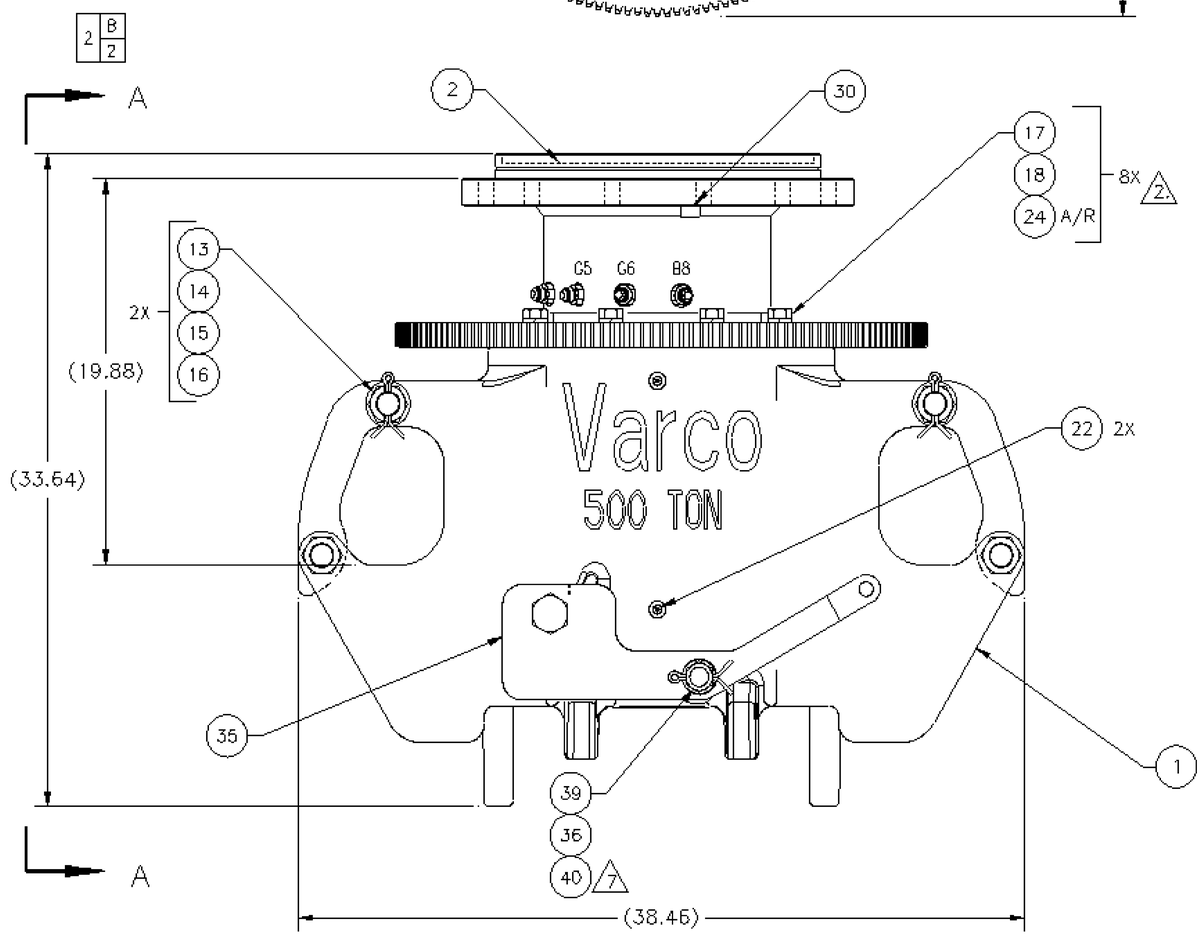

QTY REQD	PART NO	DESCRIPTION	MATERIAL	ITEM NO
1	53250	RELIEF VALVE		46
1	53405	CAP		45
7	53406	CAP		44
2	56519-8-6-S	ELBOW, O-RING BOSS/37°		43
1	56529-8-4-S	CONNECTOR. O-RING BOSS/37°		42
5	56529-8-6-S	CONNECTOR. O-RING BOSS/37°		41
1	51437-20-S	PIN, COTTER		40
1	50516-C	NUT, HEX-SLOTTED		39
1	50320-C	NUT, HEX-JAM		38
1	50020-24-C5D	SCREW, CAP-HEX HD		37
1	112754-116	BUSHING, FLANGED		36
1	119124	STOP		35
A/R	53200-271	LOCKING, COMPOUND (RED)		34
1	51222-05-12	PIN, SPIRAL		33
1	124029	SHAFT, PIVOT-LOCKING PIN		32
1	119359	RETAINER, OIL SEAL		31
1	53002-12-C	PLUG, PIPE, SQ. HEAD		30
2	112754-130	BEARING, FLANGED		29
2	115176	BUSHING		28
7	56531-8-S	PLUG, O-RING BOSS		27
7	53408	CAP	(NOT SHOWN)	26
7	56529-8-8-S	CONNECTOR, O-RING BOSS/37°		25
A/R	Z6001	LOCKWIRE, ø.051		24
10	53000-4-C	PLUG, PIPE, C'SUNK HEX		23
2	53201	FITTING, GREASE		22
2	119358	BUSHING, TURCITE		21
1	30117775	RETAINER RING		20
1	119547	SEAL, WIPER		19
8	50912-C	WASHER, LOCK		18
8	50012-20-C5D	SCREW, HEX HD		17
2	51405-24	PIN, COTTER		16
2	50820-R-C	WASHER, FLAT		15
2	50520-C	NUT, HEX-SLOTTED		14
2	114594	BOLT, CATCH LINK		13
1	77039	SEAL		12
10	118375	GLYD RING ROTARY 10.000 ROD		11
1	30119143	GLYD RING ROTARY 11.500 ROD		10
1	117826	PISTON RING		9
1	30119357	RING, THRUST		8
1	30119319	GLYD RING ROTARY 11.000 ROD		7
1	51300-381-B	O-RING		6
1	51300-273-B	O-RING		5
1	117829	GEAR, ROTATING LINK ADAPTER		4
2	51216-12	DOWEL ø1.0 X 1.50		3
1	117833-500	STEM		2
1	121340	ROTATING LINK ADAPTER 500 TON		1

LIST OF MATERIALS

PART FLAGS
- ☐ TRACEABILITY
- ☐ CRITICAL LOAD PATH ITEM
- ☐ CERTIFICATION REQUIRED

SPARE PART
- ☐ COMMISSIONING
- ☐ OPERATIONAL
- ☐ INSURANCE

DIMENSIONS ARE IN INCHES
DO NOT SCALE DOCUMENT

UNLESS OTHERWISE SPECIFIED INTERPRET DIMENSIONS & TOLERANCES PER ANSI Y14.5 & ABBREVIATIONS PER ANSI Y1.1
.X ±.1 CAN BE +TORCH CUT
.XX ±.030 .XXX ±.010
ANGULAR TOLERANCE ±0° 30'

SURFACE FINISHES
MACHINED 250/ MAX
+TORCH CUT 1000/ MAX

K	C ZAPATA	D SENEVIRATNE	D SENEVIRATNE	12/23/02
–	H. OLSTINSKI	JP5J	JP5J	6/5/97
LTR	PREPARED BY	CHECKED BY	APPROVED BY	DATE

120900 | TDS-115
NEXT ASSY | PRODUCT

Varco Systems
A Varco Company

TITLE
ROTATING LINK ADAPTER ASSEMBLY, 500 TON

SIZE	DOCUMENT NO	REVISION
D	121341	K
SCALE 1/4	WEIGHT LB 1900	SHEET 1 OF 2

Released – 01/02/2003 03:00:12P

OCF0022 (REV B)

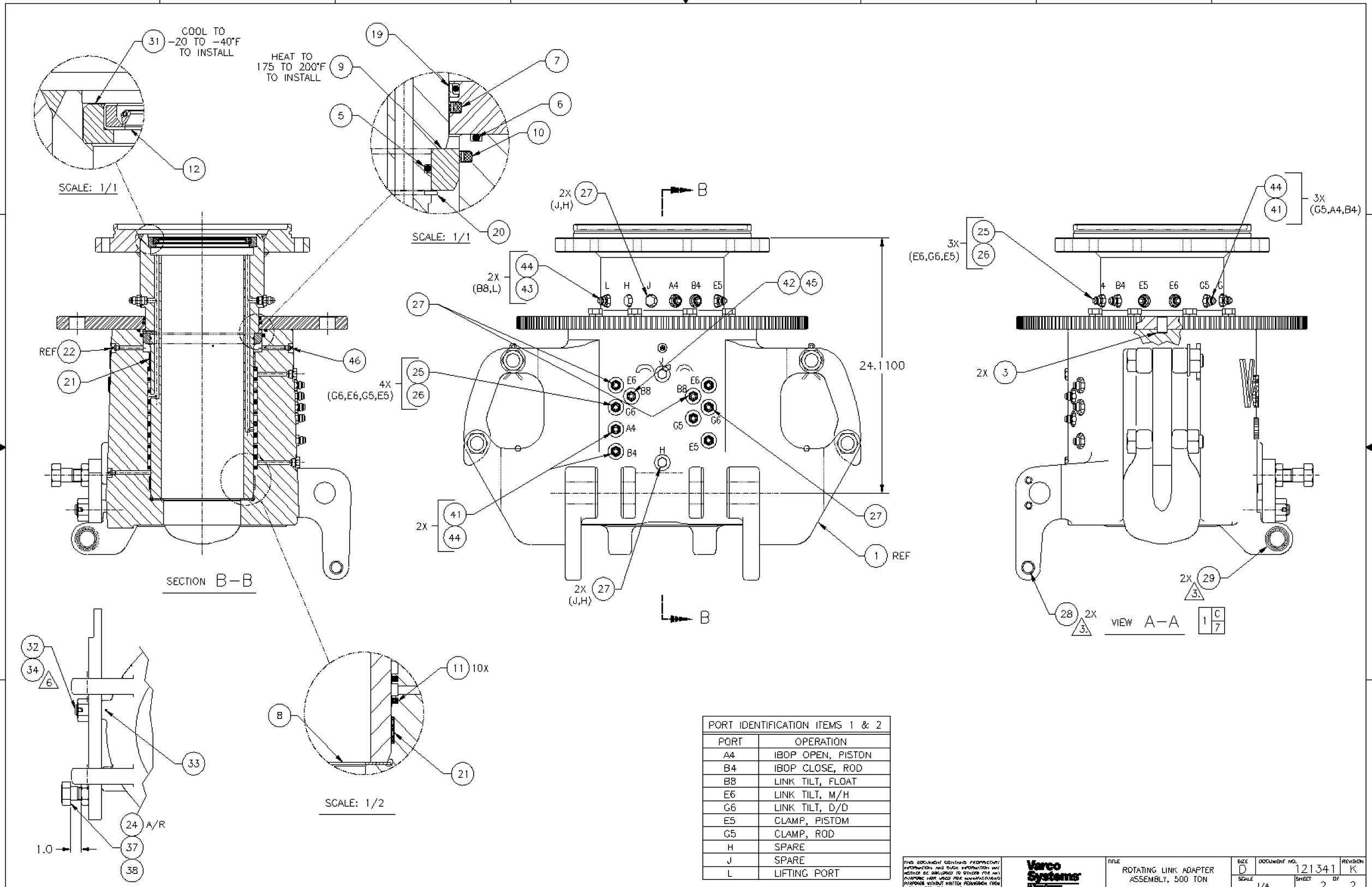

PORT IDENTIFICATION ITEMS 1 & 2	
PORT	OPERATION
A4	IBOP OPEN, PISTON
B4	IBOP CLOSE, ROD
B8	LINK TILT, FLOAT
E6	LINK TILT, M/H
G6	LINK TILT, D/D
E5	CLAMP, PISTOM
G5	CLAMP, ROD
H	SPARE
J	SPARE
L	LIFTING PORT

THIS DOCUMENT CONTAINS PROPRIETARY INFORMATION AND SUCH INFORMATION MAY NEITHER BE DISCLOSED TO OTHERS FOR ANY PURPOSE NOR USED FOR MANUFACTURING PURPOSES WITHOUT WRITTEN PERMISSION FROM VARCO INTERNATIONAL, INC.

Varco Systems

TITLE: ROTATING LINK ADAPTER ASSEMBLY, 500 TON

SIZE	DOCUMENT NO.	REVISION
D	121341	K
SCALE 1/4	SHEET 2 OF 2	

Uncontrolled - 12/03/2002 11:14:37A

DGF0022 (REV B)